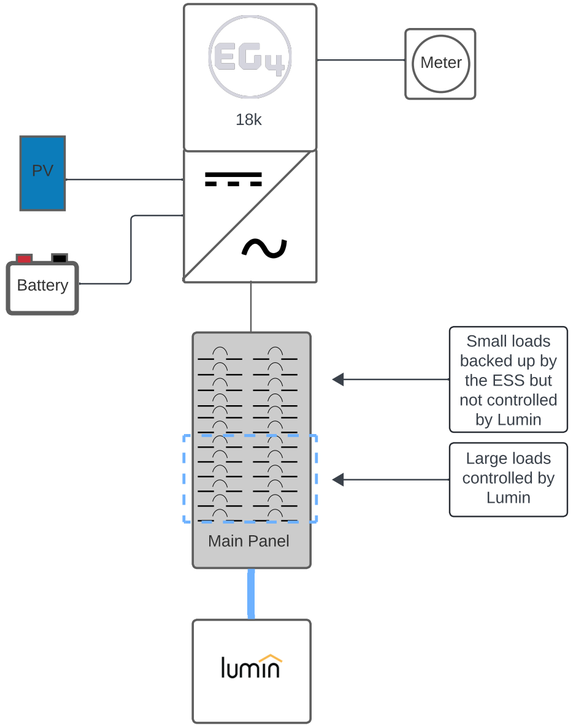
EG4
18k
Meter
PV
Battery
Small loads backed up by the ESS but not controlled by Lumin
Large loads controlled by Lumin
Main Panel
lumin

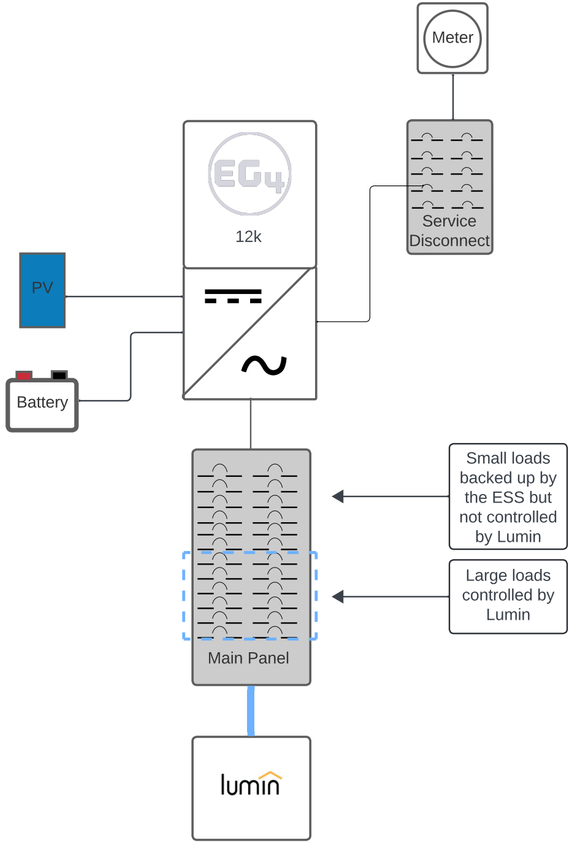
Meter
EG4
12k
Service Disconnect
PV
Battery
Small loads backed up by the ESS but not controlled by Lumin
Large loads controlled by Lumin
Main Panel
lumin

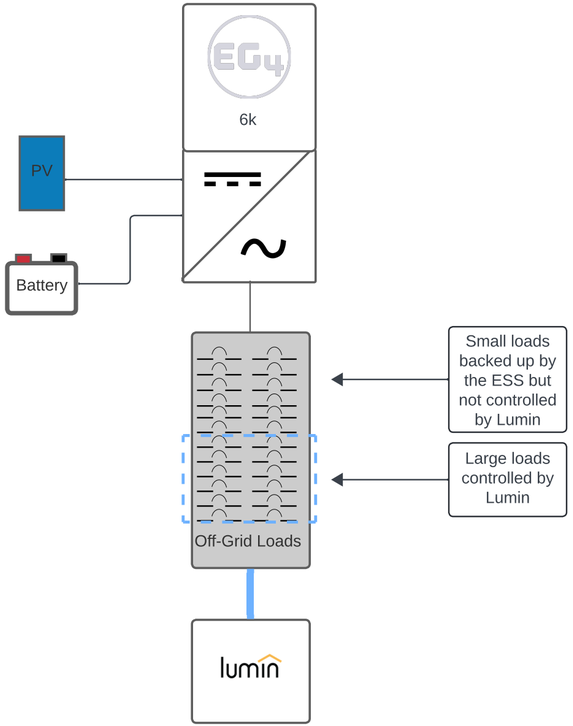
EG4
6k
PV
Battery
Small loads backed up by the ESS but not controlled by Lumin
Large loads controlled by Lumin
Off-Grid Loads
lumin